TX5e Giga-TX Jack Modules

Part Numbers: CJ588T**, CJ5E88T**, CJD5E88T**

© Panduit Corp. 2010

INSTALLATION INSTRUCTIONS

PN120J

1

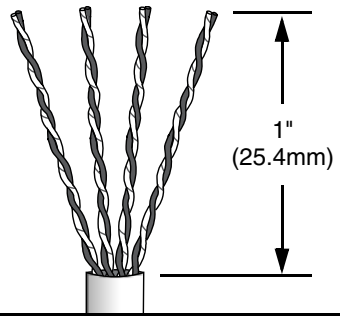

2

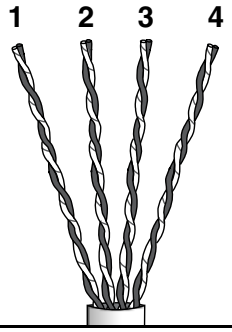

T568A	T568B
1. GREEN WHITE/GREEN	1. ORANGE WHITE/ORANGE
2. ORANGE WHITE/ORANGE	2. GREEN WHITE/GREEN
3. BLUE WHITE/BLUE	3. BLUE WHITE/BLUE
4. BROWN WHITE/BROWN	4. BROWN WHITE/BROWN

3

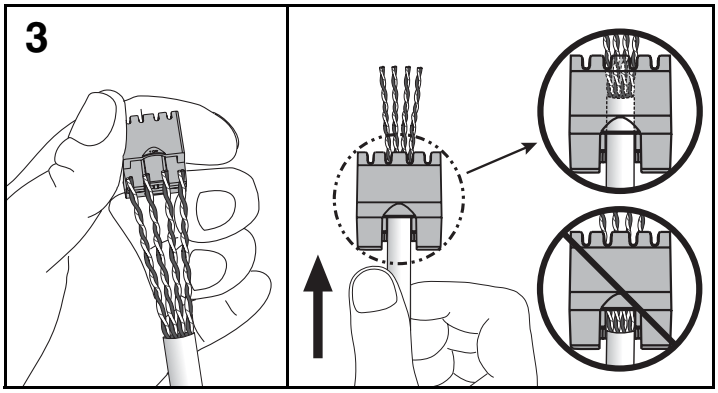

4

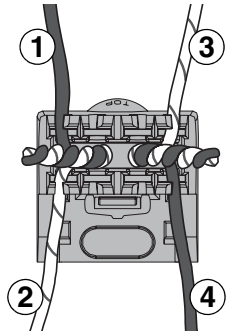

T568A	T568B
1. BROWN	1. BROWN
2. WHITE/BROWN	2. WHITE/BROWN
3. WHITE/GREEN	3. WHITE/ORANGE
4. GREEN	4. ORANGE

5

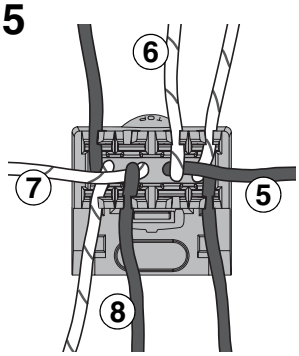

T568A	T568B
5. ORANGE	5. GREEN
6. WHITE/ORANGE	6. WHITE/GREEN
7. WHITE/BLUE	7. WHITE/BLUE
8. BLUE	8. BLUE

6

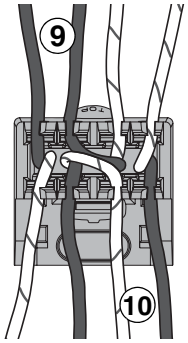

T568A	T568B
9. ORANGE	9. GREEN
10. WHITE/BLUE	10. WHITE/BLUE

7

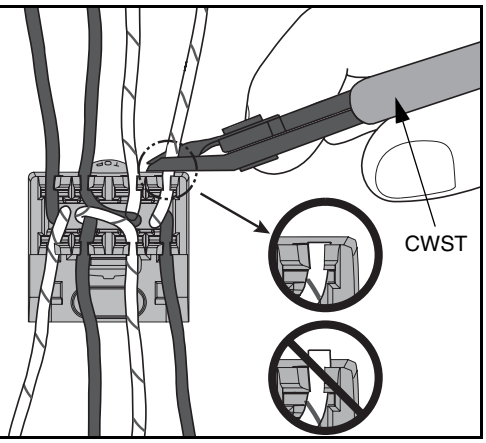

8

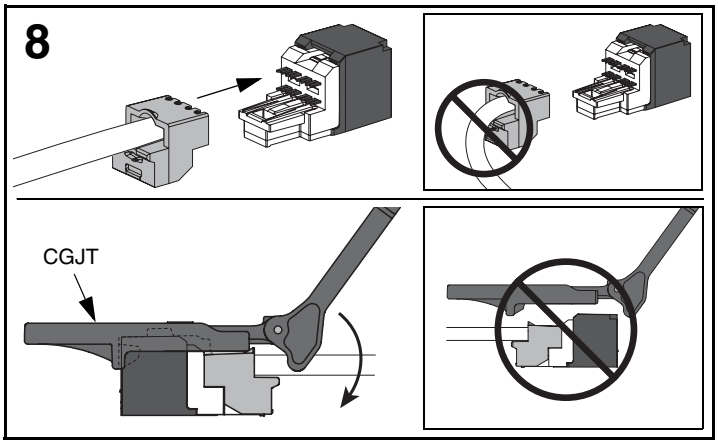

** Denotes color.

For Technical Support: www.panduit.com/resources/install_maintain.asp

TERMINATION CAP REMOVAL

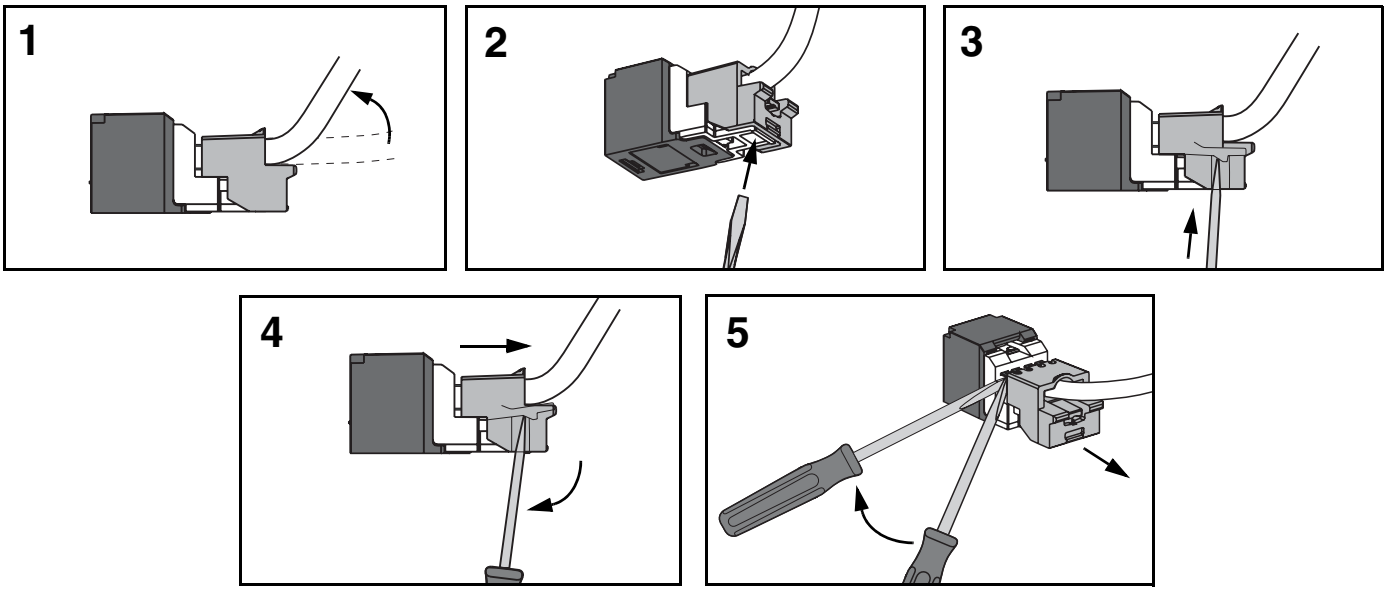

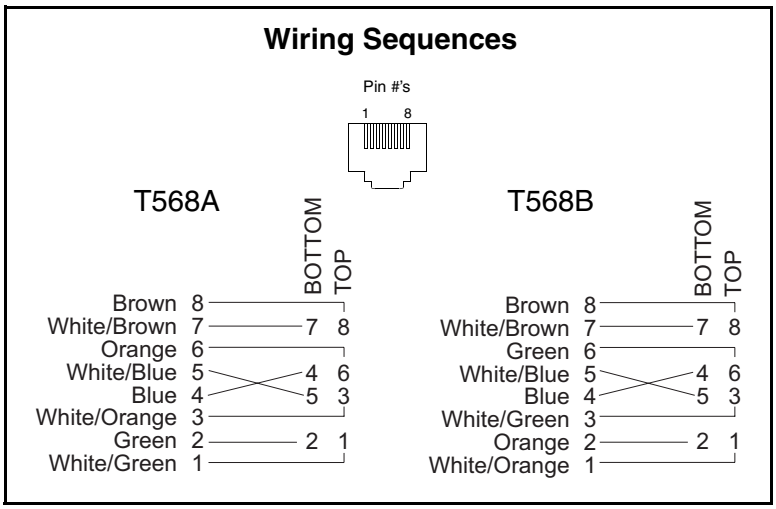

Notes:

1. For specified performance, follow ANSI/NECA/BICSI-568-2006 installation guidelines.
2. Jack Modules can terminate PVC or Plenum rated 22-24 AWG solid or stranded IWC cable with 0.048 inch (1.2 mm) maximum insulated conductor outside diameter.
3. Jack Modules may be re-terminated a minimum of 10 times.
4. For technical and performance information, consult Panduit Technical Support.

As with all Wiring Accessories, the following statements apply:

1. Never install communications wiring during a lightning storm.
2. Never install communications wiring in wet locations unless the jack is specifically designed for use in wet locations.
3. Never touch uninsulated communications wiring or terminals unless the communication line has been disconnected at the network interface.
4. Use caution when installing or modifying communication wiring.

For Instructions in Local Languages and Technical Support:
www.panduit.com/resources/install_maintain.asp

PANDUIT
www.panduit.com

E-mail:
cs@panduit.com
Fax:
(708) 444-6993